Shinn Thon UK Ltd

1st Floor, 223 Dalton Road, Barrow in Furness, Cumbria. LA14 1PQ
Tel: 0870 609 2264 Fax: 01229 833 733 E-mail: sales@shinnthon.com

Product Datasheet

SH10106R

Power Cord UK Plug – C7 2M Black

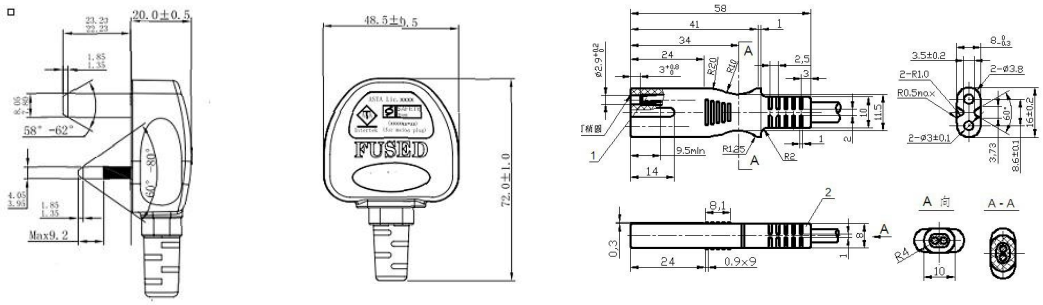

Specification:

Plug 1: UK Moulded Plug Black
Fuse: 3A
Cord:2,00mts HO3VVH2-F 2x0,75 black
Connector 2: Figure 8 Female (C7) black

Approvals:

Complies to:

RoHS 2011/65/EU
REACH 138

Packaging:

Individually hanked
Box Qty: 100pcs/Carton

Issue Date: 01/03/2019
Revision: B

Dimensions may differ from those shown.